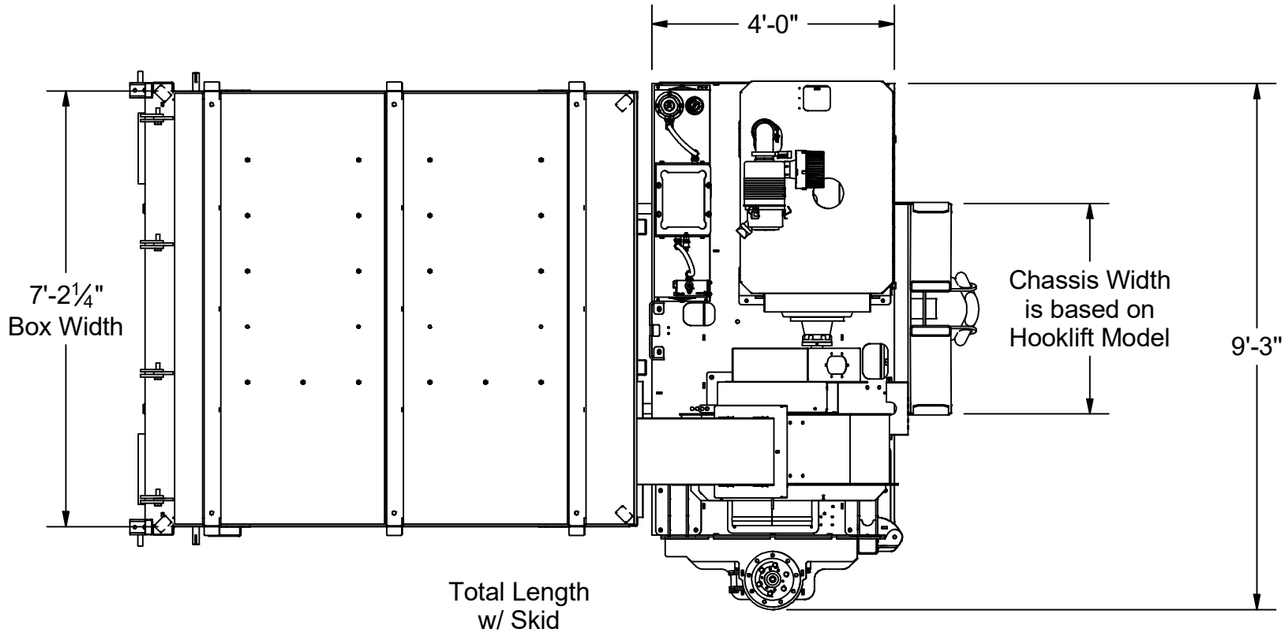

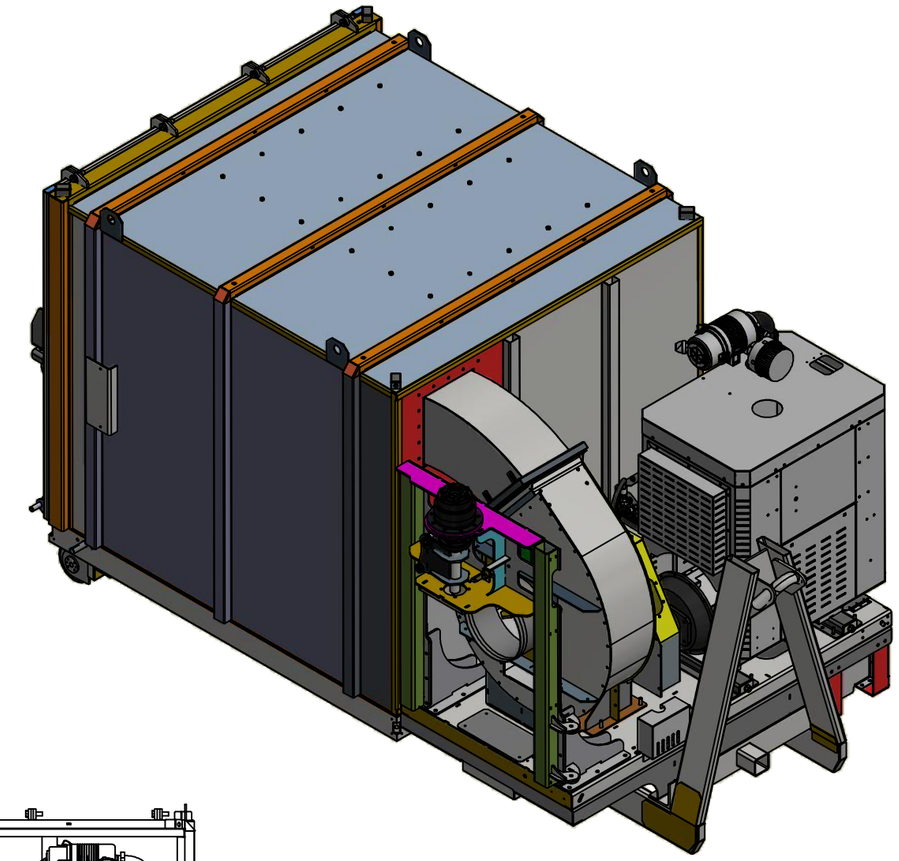

Total Length
w/ Skid
14YD - 12'-4 ⅝"
20YD - 14'-10 ⅝"
25YD - 17'-8 ⅝"
30YD - 20'-7 ⅝"

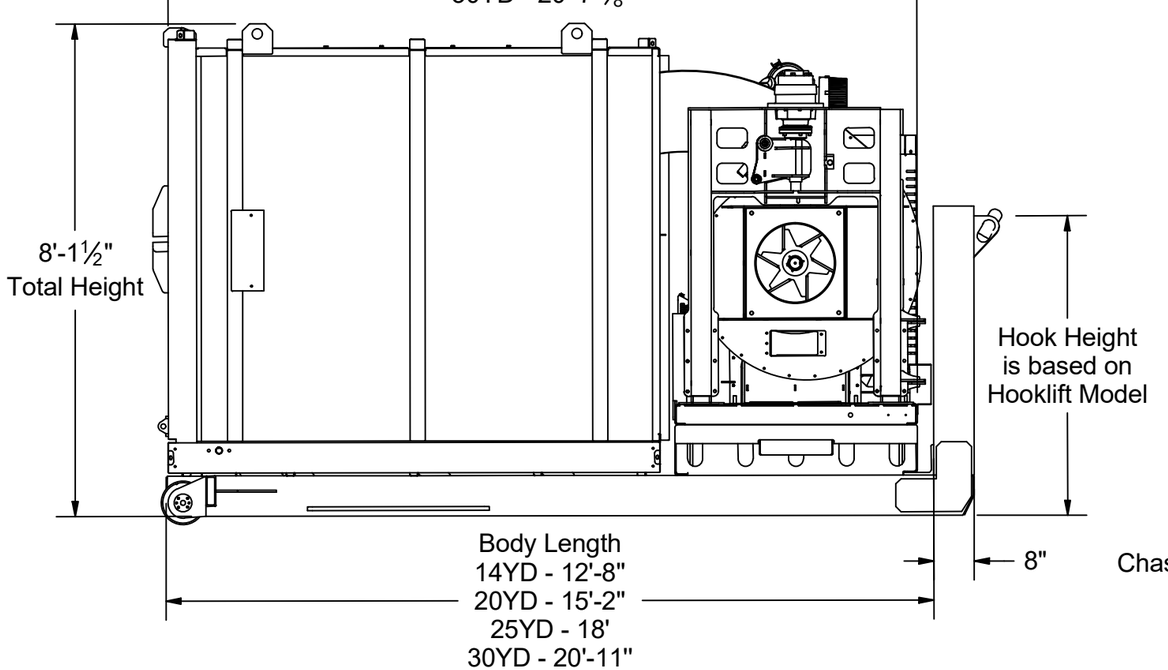

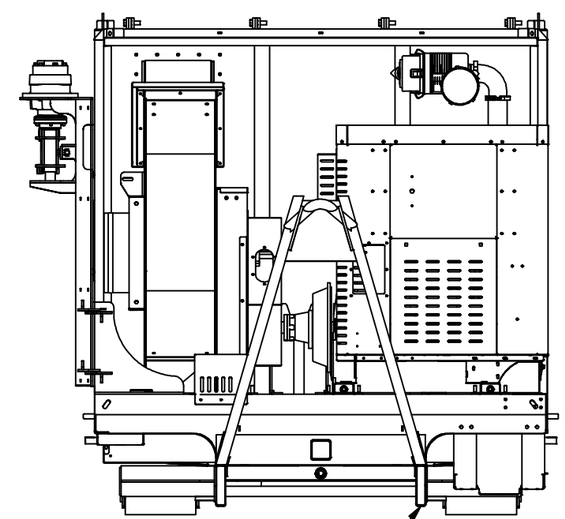

Chassis Rail Tube size is based on
model of hooklift provided
(STD 8"X2"X1/4" Wall)

DCL800SMHL

THE ODB CO